Find Personal Tutor from www.wisesprout.co.uk 找名校导师，用小草线上辅导（微信小程序同名）

Write your name here

Surname	Other names

Pearson Edexcel
Level 1/Level 2 GCSE (9-1)

Centre Number | Candidate Number

Chemistry

Paper 1

Foundation Tier

Thursday 17 May 2018 – Morning
Time: 1 hour 45 minutes

Paper Reference
1CH0/1F

You must have:
Calculator, ruler

Total Marks

Instructions

- Use **black** ink or ball-point pen.
- **Fill in the boxes** at the top of this page with your name, centre number and candidate number.
- Answer **all** questions.
- Answer the questions in the spaces provided – *there may be more space than you need.*
- Calculators may be used.
- Any diagrams may NOT be accurately drawn, unless otherwise indicated.
- You must **show all your working out** with **your answer clearly identified** at the **end of your solution**.

Information

- The total mark for this paper is 100
- The marks for **each** question are shown in brackets – *use this as a guide as to how much time to spend on each question.*
- In questions marked with an asterisk (*), marks will be awarded for your ability to structure your answer logically showing how the points that you make are related or follow on from each other where appropriate.
- A periodic table is printed on the back cover of this paper.

Advice

- Read each question carefully before you start to answer it.
- Try to answer every question.
- Check your answers if you have time at the end.

Turn over ▶

©2018 Pearson Education Ltd.

Pearson

Answer ALL questions. Write your answers in the spaces provided.

Some questions must be answered with a cross in a box ☒.
If you change your mind about an answer, put a line through the box ☒ and then mark your new answer with a cross ☒.

1 Figure 1 shows the dot and cross diagram for a molecule of ammonia.

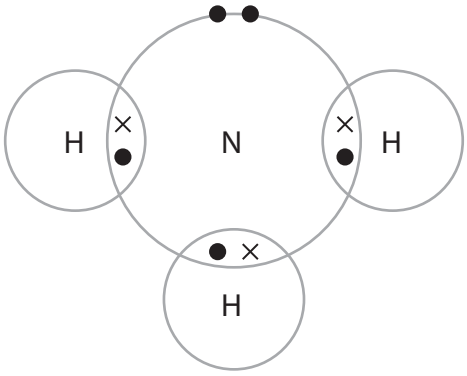

Figure 1

(a) (i) What do the dots and crosses represent in the diagram?

(1)

☐ **A** electrons

☐ **B** neutrons

☐ **C** protons

☐ **D** nuclei

(ii) Give the formula for the molecule of ammonia.

(1)

.....

(b) (i) Ammonia can be manufactured by the Haber process.

The word equation for the reaction is

nitrogen + hydrogen $\rightleftharpoons$ ammonia

State the meaning of the $\rightleftharpoons$ symbol.

(1)

.....

DO NOT WRITE IN THIS AREA DO NOT WRITE IN THIS AREA DO NOT WRITE IN THIS AREA

DO NOT WRITE IN THIS AREA
DO NOT WRITE IN THIS AREA
DO NOT WRITE IN THIS AREA

(ii) In the Haber process, the percentage yield of ammonia at equilibrium changes with temperature.

Figure 2 shows how the percentage yield of ammonia at equilibrium changes with temperature.

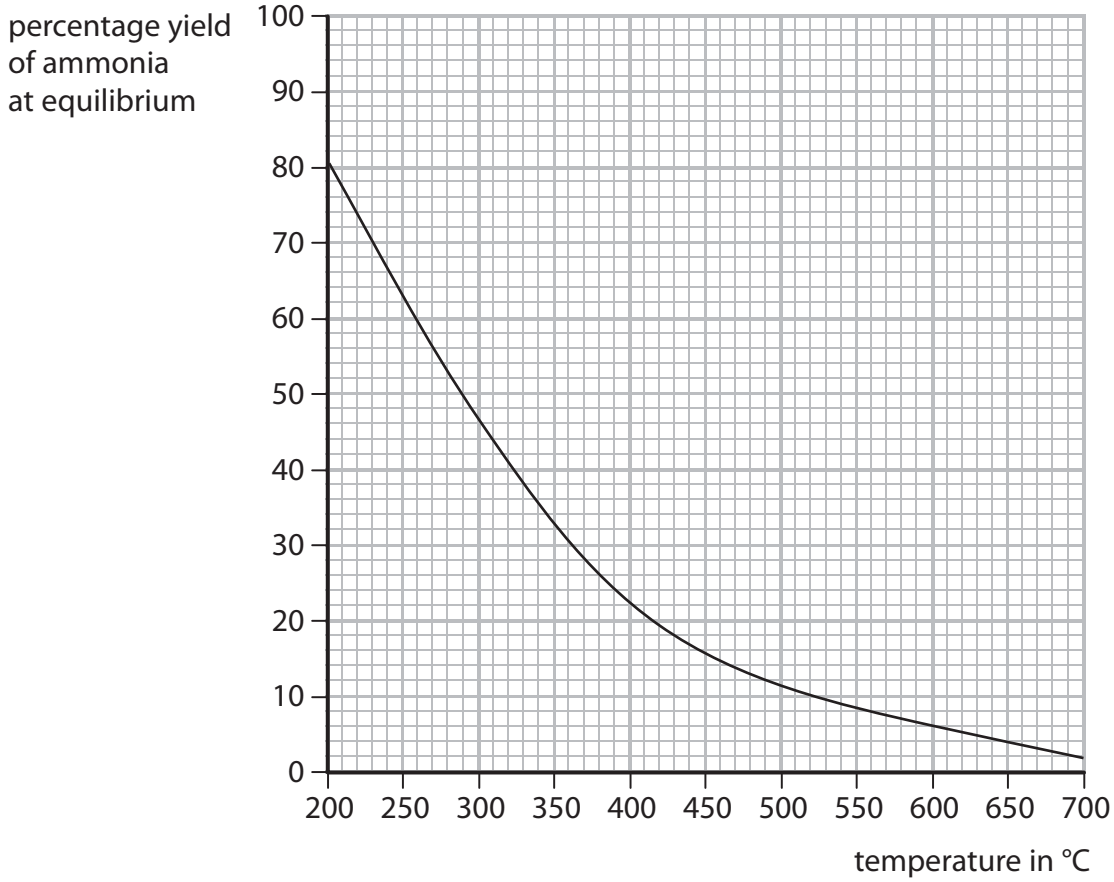

Figure 2

State what happens to the percentage yield of ammonia at equilibrium as the temperature increases.

(1)

.....

.....

(iii) Use the graph to find the percentage yield of ammonia at equilibrium at 450 °C.

(1)

percentage yield of ammonia at equilibrium = ...

(c) Ammonia reacts with nitric acid to form ammonium nitrate.

(i) Complete the word equation for this reaction.

(1)

..... + ... → .....

(ii) An ammonium ion has the formula NH_4^+.

A nitrate ion has the formula NO_3^-.

Which of the following is the formula for ammonium nitrate?

(1)

☒ **A** $(NH)_4NO_3$

☒ **B** $(NH_4NO)_3$

☒ **C** NH_4NO_3

☒ **D** $(NHNO)_{12}$

(iii) Explain why farmers spread ammonium nitrate on their fields.

(2)

.....

.....

(Total for Question 1 = 9 marks)

DO NOT WRITE IN THIS AREA DO NOT WRITE IN THIS AREA DO NOT WRITE IN THIS AREA

Find Personal Tutor from www.wisesprout.co.uk 找名校导师，用小草线上辅导（微信小程序同名）

DO NOT WRITE IN THIS AREA
DO NOT WRITE IN THIS AREA
DO NOT WRITE IN THIS AREA

BLANK PAGE

2 (a) A titration of sodium hydroxide solution with hydrochloric acid can be carried out as follows

1 a pipette is used to measure 25.00 cm^3 of sodium hydroxide solution into a conical flask
2 a few drops of indicator are added to the sodium hydroxide solution
3 the burette is filled with hydrochloric acid
4 the hydrochloric acid is added to the sodium hydroxide solution until the indicator changes colour.

(i) Describe how the pipette should be used to measure exactly 25.00 cm^3 of sodium hydroxide solution into the conical flask.

(2)

.....

.....

.....

.....

(ii) The burette is first washed with water.
It is then rinsed with some of the acid before it is filled with the acid to begin the titration.

Explain why the burette is rinsed with the acid.

(2)

.....

.....

.....

.....

DO NOT WRITE IN THIS AREA DO NOT WRITE IN THIS AREA DO NOT WRITE IN THIS AREA

DO NOT WRITE IN THIS AREA

(b) Universal indicator solution is not a suitable indicator for an acid-alkali titration.

(i) Give the name of an indicator that is suitable for use in the titration of sodium hydroxide solution with hydrochloric acid.

(1)

.....

(ii) Universal indicator goes through a series of gradual colour changes as the pH changes in a solution.

Give a reason why universal indicator is not a suitable indicator to use in an acid-alkali titration.

(1)

.....

.....

(c) Figure 3 shows some titration results obtained from an experiment in which an alkali is titrated with an acid.

	titration		
	rough	**1**	**2**
final burette reading in cm^3	25.75	49.35	23.70
initial burette reading in cm^3	0.00	25.75	0.00
volume of acid used in cm^3	25.75	23.60	23.70

Figure 3

Calculate the accurate volume of acid reacting with the alkali.

(2)

.....

.....

.....

accurate volume of acid reacting ..... cm^3

(Total for Question 2 = 8 marks)

3 (a) Atoms contain electrons, neutrons and protons.

(i) Draw one line to link each particle to its correct relative charge.

(2)

particle	**relative charge**
electron	+1
neutron	0
proton	–1

(ii) Which of the following is the relative mass of a proton?

(1)

☒ **A** 0

☒ **B** $\frac{1}{1837}$

☒ **C** 1

☒ **D** –1

(b) Argon is in group 0 of the periodic table.

Identify, using the periodic table on the back cover of this paper, which of these elements is in the same period as argon.

(1)

☒ **A** bromine

☒ **B** iron

☒ **C** magnesium

☒ **D** xenon

DO NOT WRITE IN THIS AREA DO NOT WRITE IN THIS AREA DO NOT WRITE IN THIS AREA

DO NOT WRITE IN THIS AREA
DO NOT WRITE IN THIS AREA
DO NOT WRITE IN THIS AREA

(c) Figure 4 shows the atomic number and mass number of two isotopes of argon.

isotope	atomic number	mass number
argon-38	18	38
argon-40	18	40

Figure 4

Describe the structure of an atom of argon-38 and of an atom of argon-40.

(3)

.....

.....

.....

.....

.....

.....

(Total for Question 3 = 7 marks)

4 (a) The molecular formula of butene is C_4H_8.

Which of the following is the empirical formula of butene?

(1)

☒ **A** CH

☒ **B** CH_2

☒ **C** C_4H_8

☒ **D** $(CH_2)_4$

(b) Calculate the relative formula mass of butene, C_4H_8.

(relative atomic masses: H = 1, C = 12)

(2)

.....

relative formula mass .....

(c) When burnt completely in air, butene forms carbon dioxide and water.

(i) Balance the equation for this reaction by putting numbers in the spaces provided.

(2)

$$C_4H_8 + 6O_2 \rightarrow \text{.....}\ CO_2 + \text{.....}\ H_2O$$

(ii) Describe the test to show that a gas is carbon dioxide.

(2)

.....

.....

.....

.....

DO NOT WRITE IN THIS AREA DO NOT WRITE IN THIS AREA DO NOT WRITE IN THIS AREA

DO NOT WRITE IN THIS AREA
DO NOT WRITE IN THIS AREA
DO NOT WRITE IN THIS AREA

(d) Substance X is a gas at room temperature.
It is a simple molecular, covalent substance.

Which row of the table shows the properties that substance X is most likely to have?

(1)

	boiling point in °C	relative solubility in water
☒ **A**	–6	low
☒ **B**	600	high
☒ **C**	–6	high
☒ **D**	600	low

(e) Diamond has a giant covalent structure.

State one property of diamond that is the result of its giant covalent structure.

(1)

.....

(Total for Question 4 = 9 marks)

5 Two compounds of barium are barium sulfide and barium chloride.

(a) The hazard symbol shown in Figure 5 is on bottles containing barium metal.

Figure 5

State the meaning of this hazard symbol.

(1)

.....

(b) Give the names of the elements combined in barium sulfide.

(1)

.....

.....

(c) Barium chloride is toxic.

Explain one safety precaution that should be taken when using barium chloride.

(2)

.....

.....

.....

.....

DO NOT WRITE IN THIS AREA DO NOT WRITE IN THIS AREA DO NOT WRITE IN THIS AREA

DO NOT WRITE IN THIS AREA
DO NOT WRITE IN THIS AREA
DO NOT WRITE IN THIS AREA

(d) (i) A beaker of barium chloride solution and a beaker of dilute sulfuric acid were placed on a balance, as shown in Figure 6.

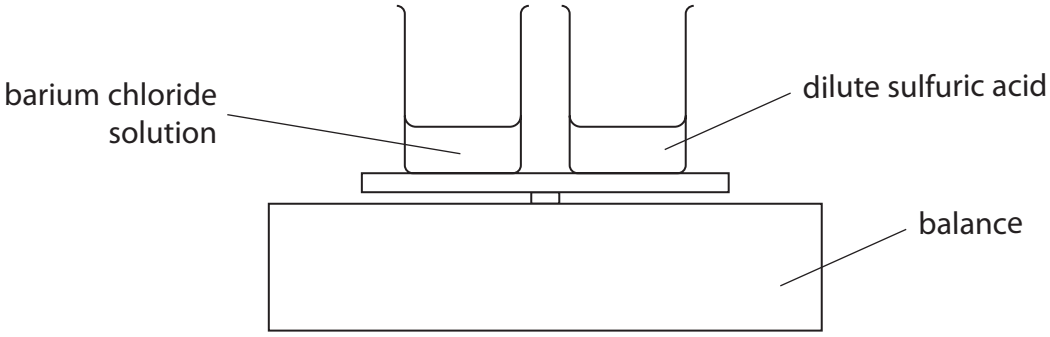

Figure 6

The total mass reading on the balance was 25.7 g.

The dilute sulfuric acid was poured into the barium chloride solution and the beaker replaced on the balance, as shown in Figure 7.

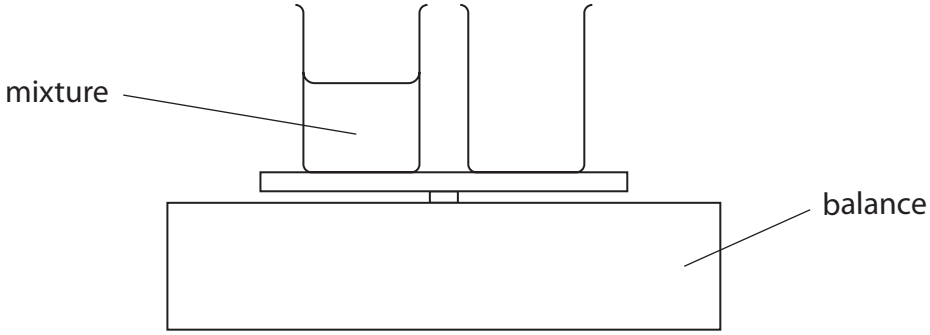

Figure 7

The mixture formed contained a white precipitate.

State the total mass reading on the balance after the reaction.

(1)

.....

(ii) Give the name of the white precipitate formed by the reaction of barium chloride solution with dilute sulfuric acid.

(1)

.....

(e) Solid sodium chloride is dissolved in water.

The sodium chloride solution is electrolysed in the apparatus shown in Figure 8.

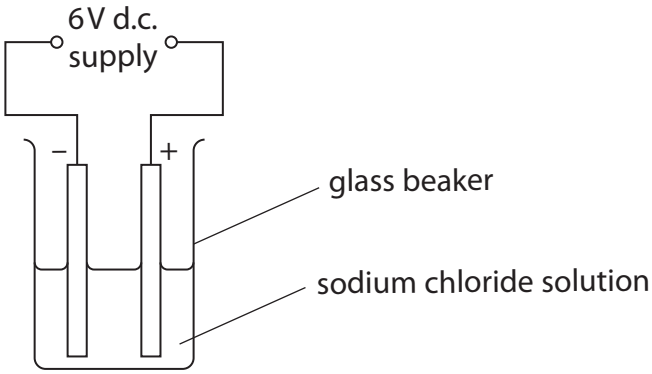

Figure 8

(i) State why sodium chloride solution, rather than solid sodium chloride, must be used in this experiment.

(1)

.....

.....

(ii) The formulae of the ions present in the sodium chloride solution are

Na^+ Cl^- H^+ OH^-

Circle the ions that would be attracted to the anode.

(1)

(iii) Molten lead bromide can be electrolysed to form molten lead and bromine gas.

Explain how a student could modify the apparatus shown in Figure 8 to carry out this electrolysis.

(2)

.....

.....

.....

(Total for Question 5 = 10 marks)

DO NOT WRITE IN THIS AREA DO NOT WRITE IN THIS AREA DO NOT WRITE IN THIS AREA

Find Personal Tutor from www.wisesprout.co.uk 找名校导师，用小草线上辅导（微信小程序同名）

DO NOT WRITE IN THIS AREA
DO NOT WRITE IN THIS AREA
DO NOT WRITE IN THIS AREA

BLANK PAGE

6 An ink is a mixture of coloured substances dissolved in water.

(a) Which method is used to separate the coloured substances in the ink?

(1)

☒ **A** chromatography

☒ **B** crystallisation

☒ **C** filtration

☒ **D** fractional distillation

(b) The apparatus shown in Figure 9 can be used to separate water from ink.

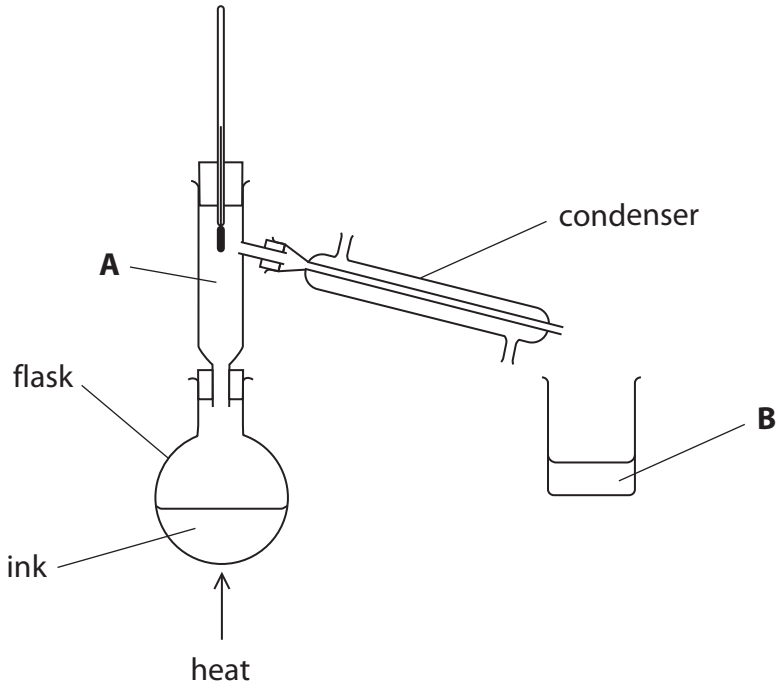

Figure 9

(i) Cold water flows through the condenser.

On Figure 9 use arrows to show where the water should flow in and where it should flow out.

(1)

DO NOT WRITE IN THIS AREA
DO NOT WRITE IN THIS AREA
DO NOT WRITE IN THIS AREA

DO NOT WRITE IN THIS AREA

(ii) Explain why a condenser is used.

(2)

.....

.....

.....

.....

(iii) The flask was heated with a Bunsen burner.

Give the name of an alternative piece of apparatus that could be used to heat the flask.

(1)

.....

.....

(c) The particles in the ink in the flask can be shown as in Figure 10.

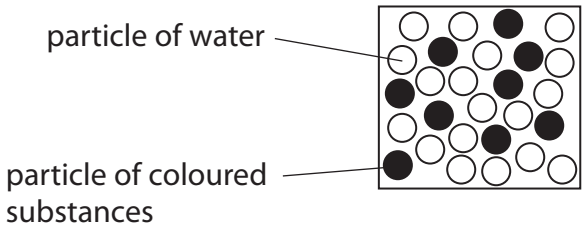

Figure 10

In the boxes below, draw the arrangement of particles that would be expected at **A** and **B** shown in Figure 9.

(2)

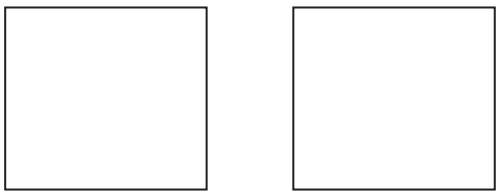

particles at **A** particles at **B**

(d) Changes of state between the three states of matter are shown in Figure 11.

$$\text{SOLID} \underset{\text{freezing}}{\overset{\text{melting}}{\rightleftharpoons}} \text{LIQUID} \underset{\text{condensing}}{\overset{\text{evaporating}}{\rightleftharpoons}} \text{GAS}$$

Figure 11

The changes shown are physical changes.

Explain why these changes are called physical changes rather than chemical changes.

(2)

.....

.....

.....

.....

(Total for Question 6 = 9 marks)

DO NOT WRITE IN THIS AREA DO NOT WRITE IN THIS AREA DO NOT WRITE IN THIS AREA

Find Personal Tutor from www.wisesprout.co.uk 找名校导师，用小草线上辅导（微信小程序同名）

DO NOT WRITE IN THIS AREA
DO NOT WRITE IN THIS AREA
DO NOT WRITE IN THIS AREA

BLANK PAGE

7 *(a) Pure metals are often converted into more useful alloys.
For example, aluminium is converted into an alloy used in aircraft, iron is converted into an alloy used in cutlery and gold alloys are used in jewellery.
These processes of alloying change the structures of the metals.

Some properties of pure aluminium, iron and gold are shown in Figure 12.

	density in g cm^{-3}	**malleability**	**relative strength**
aluminium	2.70	easy to bend	low
iron	7.75	easy to bend	low
gold	19.3	easy to bend	low

Figure 12

Explain how alloying changes these pure metals to make the alloys more suitable for the given uses.

(6)

.....

.....

.....

.....

.....

.....

.....

.....

.....

.....

.....

.....

.....

.....

.....

DO NOT WRITE IN THIS AREA DO NOT WRITE IN THIS AREA DO NOT WRITE IN THIS AREA

Find Personal Tutor from www.wisesprout.co.uk 找名校导师，用小草线上辅导（微信小程序同名）

DO NOT WRITE IN THIS AREA
DO NOT WRITE IN THIS AREA
DO NOT WRITE IN THIS AREA

(b) Iron objects can corrode when exposed to the atmosphere.

(i) Corrosion involves the oxidation of iron.

State what is meant by **oxidation**.

(1)

.....

.....

.....

(ii) Painting iron objects prevents corrosion.

Explain why painting iron objects prevents corrosion.

(2)

.....

.....

.....

.....

(iii) Corrosion of iron objects can be prevented by painting them or by electroplating them.

State one **other** way of preventing the corrosion of iron objects.

(1)

.....

DO NOT WRITE IN THIS AREA DO NOT WRITE IN THIS AREA DO NOT WRITE IN THIS AREA

DO NOT WRITE IN THIS AREA
DO NOT WRITE IN THIS AREA
DO NOT WRITE IN THIS AREA

(c) The apparatus shown in Figure 13 was used to electroplate a spoon with nickel.

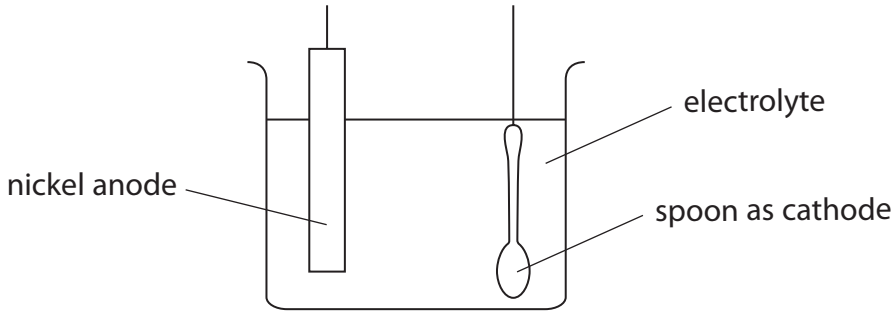

Figure 13

(i) State to what the anode and cathode have to be connected in order to carry out the electroplating.

(1)

.....

(ii) Predict the name of a substance that could be dissolved in water to form the electrolyte for this electroplating.

(1)

.....

(Total for Question 7 = 12 marks)

8 (a) State **two** characteristic properties of metals.

(2)

property 1 .....

property 2 .....

(b) Acids are used to make salts.

Give the name of the acid used to make chlorides.

(1)

.....

(c) Salts of metals can be prepared by reacting the metal with an acid to produce the salt and hydrogen.

(i) Describe the test to show that the gas is hydrogen.

(2)

.....

.....

.....

.....

(ii) Nickel is a metal.

Explain how the structure of a nickel atom, Ni, changes when it forms a nickel ion, Ni^{2+}.

(2)

.....

.....

.....

.....

DO NOT WRITE IN THIS AREA DO NOT WRITE IN THIS AREA DO NOT WRITE IN THIS AREA

DO NOT WRITE IN THIS AREA

(d) A nickel sulfate solution is made by dissolving 23.5 g of nickel sulfate to make 250 cm^3 of solution.

Calculate the concentration of the solution in g dm^{-3}.

(2)

.....

.....

.....

.....

.....

concentration = ... g dm^{-3}

(e) Excess solid nickel carbonate is added to dilute sulfuric acid in a beaker.

nickel carbonate + sulfuric acid → nickel sulfate + carbon dioxide + water

Nickel sulfate is formed in solution.

Describe how a sample of pure, dry nickel sulfate crystals can be obtained from the mixture of nickel sulfate solution and excess solid nickel carbonate in the beaker.

(3)

.....

.....

.....

.....

.....

.....

(Total for Question 8 = 12 marks)

9 Most metals are extracted from ores found in the Earth's crust.

The method used to extract a metal from its ore is linked to the reactivity of the metal.

Part of the reactivity series is shown in Figure 14.

calcium	most reactive
aluminium	↑
zinc	
iron	
copper	
gold	least reactive

Figure 14

(a) Iron ore contains iron oxide.

Iron is extracted from iron oxide by heating the oxide with carbon.

$$\text{iron oxide} + \text{carbon} \rightarrow \text{iron} + \text{carbon dioxide}$$

(i) In this reaction

(1)

☒ **A** carbon is reduced

☒ **B** iron oxide is neutralised

☒ **C** iron oxide is reduced

☒ **D** iron is oxidised

DO NOT WRITE IN THIS AREA DO NOT WRITE IN THIS AREA DO NOT WRITE IN THIS AREA

DO NOT WRITE IN THIS AREA

(ii) The formula of the iron oxide is Fe_2O_3.

Calculate the maximum mass of iron that can be obtained from 240 tonnes of iron oxide, Fe_2O_3.

(relative atomic masses: O = 16, Fe = 56)

(3)

.....

.....

.....

.....

.....

.....

mass of iron = ... tonnes

(b) Aluminium cannot be extracted by heating its oxide with carbon.
Aluminium has to be extracted from its oxide by electrolysis.

Explain why.

(2)

.....

.....

.....

.....

(c) Predict the method that will have to be used to extract calcium from its ore.

(1)

.....

*(d) Aluminium is extracted from its ore by electrolysis.
Iron is extracted from its ore by heating with carbon.
Both metals can also be obtained by recycling.

Explain the advantages of recycling aluminium and iron rather than extracting them from their ores.

(6)

DO NOT WRITE IN THIS AREA
DO NOT WRITE IN THIS AREA
DO NOT WRITE IN THIS AREA

Find Personal Tutor from www.wisesprout.co.uk 找名校导师，用小草线上辅导（微信小程序同名）

DO NOT WRITE IN THIS AREA
DO NOT WRITE IN THIS AREA
DO NOT WRITE IN THIS AREA

(Total for Question 9 = 13 marks)

10 (a) Hydrogen burns in air at a temperature well above 100 °C to form water.

(i) The boiling points of hydrogen and water are shown in Figure 15.

	boiling point in °C
hydrogen	–253
water	100

Figure 15

Use this information to add the missing state symbols to the equation for the reaction taking place as the hydrogen burns.

(2)

$$2H_2(\ldots\ldots) + O_2(g) \rightarrow 2H_2O(\ldots\ldots)$$

(ii) The atom economy for the reaction in (i) is 100%.

State how the equation shows that the atom economy is 100%.

(1)

.....

.....

(b) Lead can be obtained by heating its oxide with carbon.
The balanced equation for the reaction is

$$2PbO + C \rightarrow 2Pb + CO_2$$

Calculate the atom economy for the production of lead in this reaction.
(relative atomic masses: C = 12, O = 16, Pb = 207
relative formula masses: PbO = 223, CO_2 = 44)

Give your answer to two significant figures.

(4)

.....

.....

.....

.....

.....

.....

atom economy = ... %

DO NOT WRITE IN THIS AREA DO NOT WRITE IN THIS AREA DO NOT WRITE IN THIS AREA

DO NOT WRITE IN THIS AREA

(c) (i) In an experiment to produce lead, 7.67 g of lead are obtained.
The theoretical yield of lead for the experiment is 11.80 g.

Calculate the percentage yield of lead in this experiment.

(2)

.....

.....

.....

.....

.....

.....

percentage yield = ...

(ii) In most reactions, the percentage yield of any product is less than 100%.

Give **two** reasons why the percentage yield is less than 100%.

(2)

reason 1 .....

.....

reason 2 .....

.....

(Total for Question 10 = 11 marks)

TOTAL FOR PAPER = 100 MARKS

Find Personal Tutor from www.wisesprout.co.uk 找名校导师，用小草线上辅导（微信小程序同名）

The periodic table of the elements

Key

relative atomic mass
atomic symbol
name
atomic (proton) number

1	2											3	4	5	6	7	0
							1 **H** hydrogen 1										4 **He** helium 2
7 **Li** lithium 3	9 **Be** beryllium 4											11 **B** boron 5	12 **C** carbon 6	14 **N** nitrogen 7	16 **O** oxygen 8	19 **F** fluorine 9	20 **Ne** neon 10
23 **Na** sodium 11	24 **Mg** magnesium 12											27 **Al** aluminium 13	28 **Si** silicon 14	31 **P** phosphorus 15	32 **S** sulfur 16	35.5 **Cl** chlorine 17	40 **Ar** argon 18
39 **K** potassium 19	40 **Ca** calcium 20	45 **Sc** scandium 21	48 **Ti** titanium 22	51 **V** vanadium 23	52 **Cr** chromium 24	55 **Mn** manganese 25	56 **Fe** iron 26	59 **Co** cobalt 27	59 **Ni** nickel 28	63.5 **Cu** copper 29	65 **Zn** zinc 30	70 **Ga** gallium 31	73 **Ge** germanium 32	75 **As** arsenic 33	79 **Se** selenium 34	80 **Br** bromine 35	84 **Kr** krypton 36
85 **Rb** rubidium 37	88 **Sr** strontium 38	89 **Y** yttrium 39	91 **Zr** zirconium 40	93 **Nb** niobium 41	96 **Mo** molybdenum 42	[98] **Tc** technetium 43	101 **Ru** ruthenium 44	103 **Rh** rhodium 45	106 **Pd** palladium 46	108 **Ag** silver 47	112 **Cd** cadmium 48	115 **In** indium 49	119 **Sn** tin 50	122 **Sb** antimony 51	128 **Te** tellurium 52	127 **I** iodine 53	131 **Xe** xenon 54
133 **Cs** caesium 55	137 **Ba** barium 56	139 **La*** lanthanum 57	178 **Hf** hafnium 72	181 **Ta** tantalum 73	184 **W** tungsten 74	186 **Re** rhenium 75	190 **Os** osmium 76	192 **Ir** iridium 77	195 **Pt** platinum 78	197 **Au** gold 79	201 **Hg** mercury 80	204 **Tl** thallium 81	207 **Pb** lead 82	209 **Bi** bismuth 83	[209] **Po** polonium 84	[210] **At** astatine 85	[222] **Rn** radon 86

**** The elements with atomic numbers from 58 to 71 are omitted from this part of the periodic table.***

The relative atomic masses of copper and chlorine have not been rounded to the nearest whole number.

P 5 2 4 7 2 R A 0 3 2 3 2

DO NOT WRITE IN THIS AREA DO NOT WRITE IN THIS AREA DO NOT WRITE IN THIS AREA