Find Personal Tutor from www.wisesprout.co.uk 找名校导师，用小草线上辅导（微信小程序同名）

Please check the examination details below before entering your candidate information

Candidate surname	Other names

Pearson Edexcel Level 3 GCE

Centre Number | Candidate Number

Friday 14 June 2019

Afternoon | Paper Reference **9MA0-32**

Mathematics

Advanced
Paper 32: Mechanics

You must have:
Mathematical Formulae and Statistical Tables, calculator

Total Marks

Candidates may use any calculator allowed by Pearson regulations. Calculators must not have the facility for symbolic algebra manipulation, differentiation and integration, or have retrievable mathematical formulae stored in them.

Instructions

- Use **black** ink or ball-point pen.
- If pencil is used for diagrams/sketches/graphs it must be dark (HB or B).
- **Fill in the boxes** at the top of this page with your name, centre number and candidate number.
- Answer **all** questions and ensure that your answers to parts of questions are clearly labelled.
- Answer the questions in the spaces provided – *there may be more space than you need.*
- You should show sufficient working to make your methods clear. Answers without working may not gain full credit.
- Answers should be given to three significant figures unless otherwise stated.

Information

- A booklet 'Mathematical Formulae and Statistical Tables' is provided.
- The total mark for this part of the examination is 50. There are 5 questions.
- The marks for **each** question are shown in brackets – *use this as a guide as to how much time to spend on each question.*
- Unless otherwise stated, whenever a value of g is required, take $g = 9.8\ \text{m s}^{-2}$ and give your answer to either 2 significant figures or 3 significant figures.

Advice

- Read each question carefully before you start to answer it.
- Try to answer every question.
- Check your answers if you have time at the end.

Turn over ▶

©2019 Pearson Education Ltd.
1/1/1/1/C2/1/

P 6 3 3 5 9 A 0 1 2 0

Pearson

Find Personal Tutor from www.wisesprout.co.uk 找名校导师，用小草线上辅导（微信小程序同名）

Answer ALL questions. Write your answers in the spaces provided.

1. [*In this question position vectors are given relative to a fixed origin O*]

At time t seconds, where $t \geqslant 0$, a particle, P, moves so that its velocity $\mathbf{v}\,\mathrm{m\,s^{-1}}$ is given by

$$\mathbf{v} = 6t\mathbf{i} - 5t^{\frac{3}{2}}\mathbf{j}$$

When $t = 0$, the position vector of P is $(-20\mathbf{i} + 20\mathbf{j})\,\mathrm{m}$.

(a) Find the acceleration of P when $t = 4$

(3)

(b) Find the position vector of P when $t = 4$

(3)

DO NOT WRITE IN THIS AREA
DO NOT WRITE IN THIS AREA
DO NOT WRITE IN THIS AREA

Find Personal Tutor from www.wisesprout.co.uk 找名校导师，用小草线上辅导（微信小程序同名）

DO NOT WRITE IN THIS AREA

Question 1 continued

(Total for Question 1 is 6 marks)

2. A particle, P, moves with constant acceleration $(2\mathbf{i} - 3\mathbf{j})\,\mathrm{m\,s^{-2}}$

At time $t = 0$, the particle is at the point A and is moving with velocity $(-\mathbf{i} + 4\mathbf{j})\,\mathrm{m\,s^{-1}}$

At time $t = T$ seconds, P is moving in the direction of vector $(3\mathbf{i} - 4\mathbf{j})$

(a) Find the value of T.

(4)

At time $t = 4$ seconds, P is at the point B.

(b) Find the distance AB.

(4)

DO NOT WRITE IN THIS AREA DO NOT WRITE IN THIS AREA DO NOT WRITE IN THIS AREA

Find Personal Tutor from www.wisesprout.co.uk 找名校导师，用小草线上辅导（微信小程序同名）

DO NOT WRITE IN THIS AREA

Question 2 continued

(Total for Question 2 is 8 marks)

3.

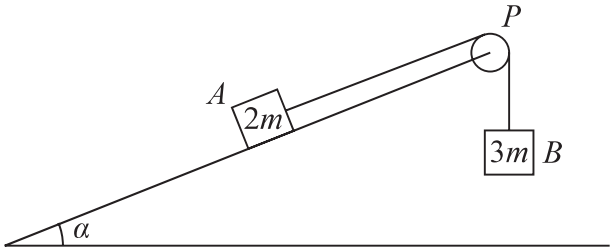

Figure 1

Two blocks, A and B, of masses $2m$ and $3m$ respectively, are attached to the ends of a light string.

Initially A is held at rest on a fixed rough plane.

The plane is inclined at angle α to the horizontal ground, where $\tan\alpha = \frac{5}{12}$

The string passes over a small smooth pulley, P, fixed at the top of the plane.

The part of the string from A to P is parallel to a line of greatest slope of the plane. Block B hangs freely below P, as shown in Figure 1.

The coefficient of friction between A and the plane is $\frac{2}{3}$

The blocks are released from rest with the string taut and A moves up the plane.

The tension in the string immediately after the blocks are released is T.

The blocks are modelled as particles and the string is modelled as being inextensible.

(a) Show that $T = \frac{12mg}{5}$

(8)

After B reaches the ground, A continues to move up the plane until it comes to rest before reaching P.

(b) Determine whether A will remain at rest, carefully justifying your answer.

(2)

(c) Suggest two refinements to the model that would make it more realistic.

(2)

DO NOT WRITE IN THIS AREA
DO NOT WRITE IN THIS AREA
DO NOT WRITE IN THIS AREA

Find Personal Tutor from www.wisesprout.co.uk 找名校导师，用小草线上辅导（微信小程序同名）

DO NOT WRITE IN THIS AREA

Question 3 continued

Find Personal Tutor from www.wisesprout.co.uk 找名校导师，用小草线上辅导（微信小程序同名）

Question 3 continued

DO NOT WRITE IN THIS AREA
DO NOT WRITE IN THIS AREA
DO NOT WRITE IN THIS AREA

Find Personal Tutor from www.wisesprout.co.uk 找名校导师，用小草线上辅导（微信小程序同名）

DO NOT WRITE IN THIS AREA

Question 3 continued

(Total for Question 3 is 12 marks)

4.

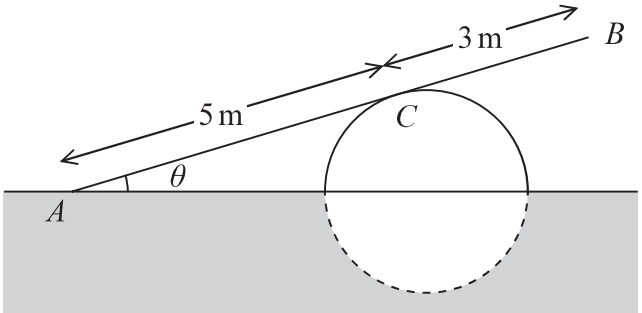

Figure 2

A ramp, AB, of length 8 m and mass 20 kg, rests in equilibrium with the end A on rough horizontal ground.

The ramp rests on a smooth solid cylindrical drum which is partly under the ground. The drum is fixed with its axis at the same horizontal level as A.

The point of contact between the ramp and the drum is C, where $AC = 5$ m, as shown in Figure 2.

The ramp is resting in a vertical plane which is perpendicular to the axis of the drum, at an angle θ to the horizontal, where $\tan\theta = \frac{7}{24}$

The ramp is modelled as a uniform rod.

(a) Explain why the reaction from the drum on the ramp at point C acts in a direction which is perpendicular to the ramp.

(1)

(b) Find the magnitude of the resultant force acting on the ramp at A.

(9)

The ramp is still in equilibrium in the position shown in Figure 2 but the ramp is not now modelled as being uniform.

Given that the centre of mass of the ramp is assumed to be closer to A than to B,

(c) state how this would affect the magnitude of the normal reaction between the ramp and the drum at C.

(1)

DO NOT WRITE IN THIS AREA
DO NOT WRITE IN THIS AREA
DO NOT WRITE IN THIS AREA

Find Personal Tutor from www.wisesprout.co.uk 找名校导师，用小草线上辅导（微信小程序同名）

DO NOT WRITE IN THIS AREA

Question 4 continued

Find Personal Tutor from www.wisesprout.co.uk 找名校导师，用小草线上辅导（微信小程序同名）

Question 4 continued

DO NOT WRITE IN THIS AREA
DO NOT WRITE IN THIS AREA
DO NOT WRITE IN THIS AREA

Find Personal Tutor from www.wisesprout.co.uk 找名校导师，用小草线上辅导（微信小程序同名）

DO NOT WRITE IN THIS AREA

Question 4 continued

(Total for Question 4 is 11 marks)

5.

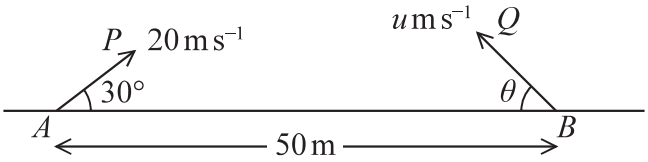

Figure 3

The points A and B lie 50 m apart on horizontal ground.

At time $t = 0$ two small balls, P and Q, are projected in the vertical plane containing AB.

Ball P is projected from A with speed $20\,\text{m s}^{-1}$ at 30° to AB.

Ball Q is projected from B with speed $u\,\text{m s}^{-1}$ at angle θ to BA, as shown in Figure 3.

At time $t = 2$ seconds, P and Q collide.

Until they collide, the balls are modelled as particles moving freely under gravity.

(a) Find the velocity of P at the instant before it collides with Q.

(6)

(b) Find

(i) the size of angle θ,

(ii) the value of u.

(6)

(c) State one limitation of the model, other than air resistance, that could affect the accuracy of your answers.

(1)

DO NOT WRITE IN THIS AREA
DO NOT WRITE IN THIS AREA
DO NOT WRITE IN THIS AREA

Find Personal Tutor from www.wisesprout.co.uk 找名校导师，用小草线上辅导（微信小程序同名）

DO NOT WRITE IN THIS AREA
DO NOT WRITE IN THIS AREA
DO NOT WRITE IN THIS AREA

Question 5 continued

Find Personal Tutor from www.wisesprout.co.uk 找名校导师，用小草线上辅导（微信小程序同名）

Question 5 continued

DO NOT WRITE IN THIS AREA
DO NOT WRITE IN THIS AREA
DO NOT WRITE IN THIS AREA

Find Personal Tutor from www.wisesprout.co.uk 找名校导师，用小草线上辅导（微信小程序同名）

DO NOT WRITE IN THIS AREA

Question 5 continued

Find Personal Tutor from www.wisesprout.co.uk 找名校导师，用小草线上辅导（微信小程序同名）

Question 5 continued

DO NOT WRITE IN THIS AREA
DO NOT WRITE IN THIS AREA
DO NOT WRITE IN THIS AREA

Find Personal Tutor from www.wisesprout.co.uk 找名校导师，用小草线上辅导（微信小程序同名）

DO NOT WRITE IN THIS AREA

Question 5 continued

(Total for Question 5 is 13 marks)

TOTAL FOR MECHANICS IS 50 MARKS

Find Personal Tutor from www.wisesprout.co.uk 找名校导师，用小草线上辅导（微信小程序同名）

DO NOT WRITE IN THIS AREA
DO NOT WRITE IN THIS AREA
DO NOT WRITE IN THIS AREA

BLANK PAGE